OCEANWELL

海益（厦门）建材工业有限公司

料号	236E400-E71-01J	版本	1.0
材质	100g双胶	尺寸	175X260mm
日期	2024.08.05	页数	36P 黑白
表单编号	OW-QR-CS-003	版本	1.0

USER MANUAL

Thank you for choosing Better Bathrooms.
Please read this manual before installing your product
and keep for future reference.

better bathrooms

WALL MOUNTED INTELLIGENT TOILET

BeBa_24911

BeBa_26880

- REMOTE CONTROL
- IPX4 INGRESS PROTECTION
- REAR AND FRONT WASH

236E400-E71-01J
06.08.2024

CONTENTS

SAFETY INFORMATION	3
UNIT MEASUREMENTS	5
PARTS LIST	7
PRODUCT OVERVIEW	8
BEFORE INSTALLATION	9
INSTALLATION	10
REMOTE CONTROL	17
OPERATION	18
CLEANING AND MAINTENANCE	24
REPLACING THE FILTER	25
DRAINING THE WATER TANK	26
TROUBLESHOOTING	27
SUPPORT	28
TECHNICAL SPECIFICATIONS	29

SAFETY INFORMATION

- This manual must be read and fully understood before installing or using the appliance.
- This product must not be operated without a connected water supply.
- Installation must be in accordance with all relevant local regulations applicable at the time of installation.
- It must be installed by a qualified professional to in accordance with BS 7671.
- If electrical work is carried out within the bathroom which involves addition or alteration of existing circuits, it may be notifiable to your local building control department (Part P). If unsure, professional advice should be sought.
- The toilet must be fitted in accordance with the Water Supply (Water Fittings) Regulations and Water Supply (Water Fittings) (Scotland) Byelaws.
- If the power cable or RCD are damaged in any way, the power must be disconnected until the part is replaced. Contact the retailer or manufacturer.
- The toilet must be fitted in a well-ventilated bathroom.
- The toilet must not be sprayed with liquid, or placed in a position it is likely to be sprayed.
- The toilet must not be installed in a location where it may be subject to high temperatures.
- The toilet must be stored in an upright position before installation.
- Do not over bend or kink the water supply hose as this could cause leaks
- Only use this product for its intended use. Only use attachments recommended by the manufacturer.
- Do not use this product in an outdoor environment.
- Children and people with limited physical, sensory or capabilities must be supervised when using this device or have been told the proper procedure for use beforehand.
- Do not climb or stand on the toilet.
- If the product is not working properly, disconnect from the mains and close the water supply valve immediately before contacting the supplier or a qualified professional.
- This is a Class I electrical appliance and must be correctly earthed. Make sure the earth cable is connected first during the electrical connection.
- In case of any damage to the supply cable, you must arrange for a certified and qualified electrician to replace the cable for you.
- This appliance is designed for fixed connection to the power supply. Connecting this appliance to the power supply must be performed by a qualified and authorised electrician.
- Incorrect repairs are dangerous. Repairs must only be carried out by trained and qualified engineers.

- The Supplier and Manufacturer are not responsible for any injury and/or damage caused by incorrect installation, maintenance or operation of the product.
- Do not force the soft close toilet seat down as this may damage the mechanism.
- A defective appliance may cause electric shock. Never switch on a defective appliance. The power must be disconnected before seeking assistance.
- This product is IPX4 rated, and so no part of the installation is allowed to be within bathroom Zones 0 or 1. Installation is permitted within Zone 2 and outside of the bathroom zones as long as it is not in a position where it is likely to be sprayed with water.

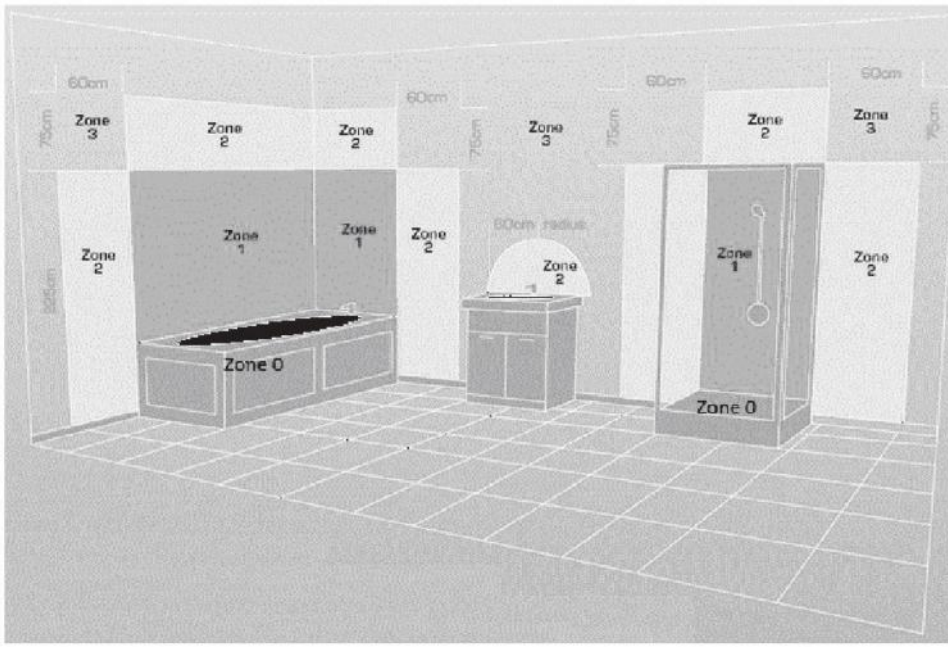

Zone 0:	The interior of the bathtub or shower basin.
Zone 1:	The area around the bathtub or shower basin up to a height of 2.25m above the floor
Zone 2:	The area stretching to 0.6m outside the bath or shower and above the bath or shower if over 2.25m

INSTALLATION DIAGRAMS - BeBa_24911

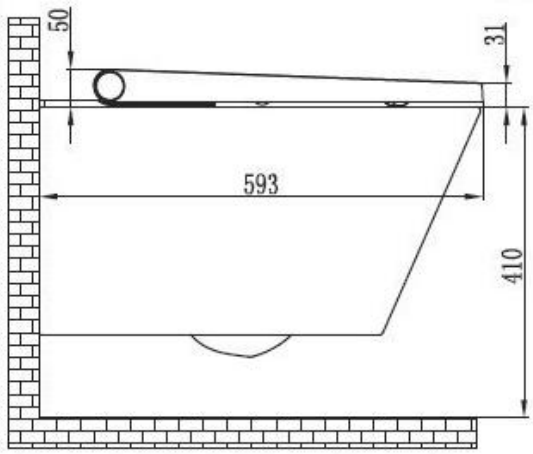

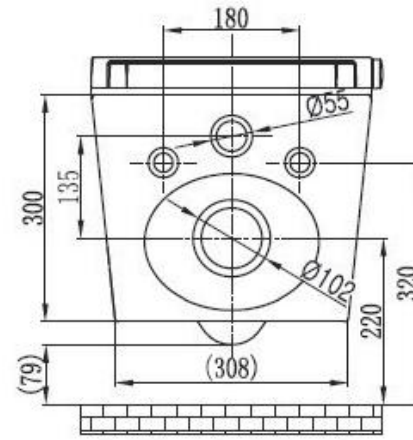

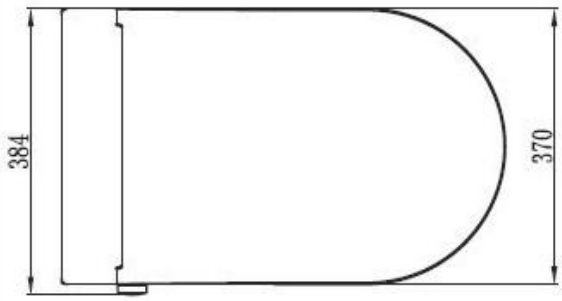

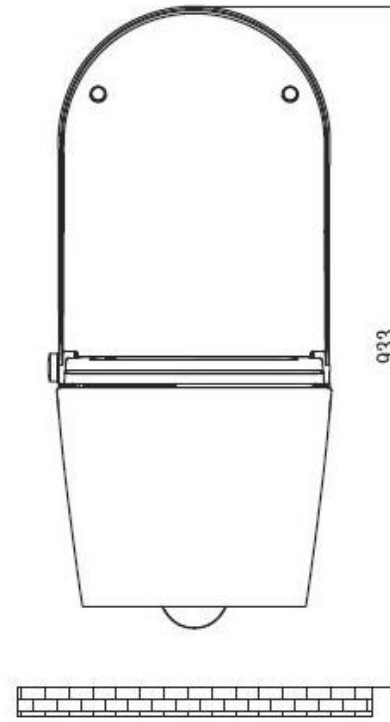

INSTALLATION DIAGRAMS - BeBa_26880

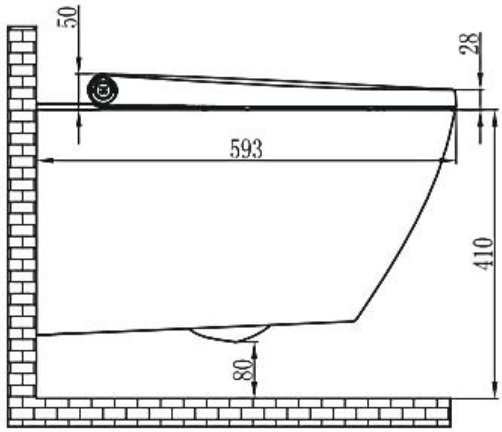

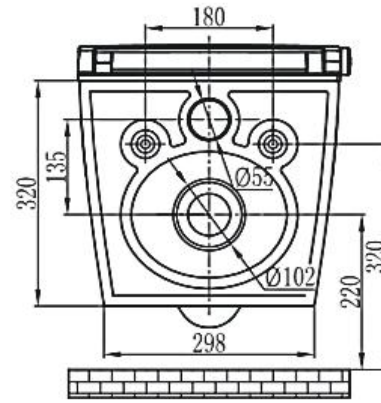

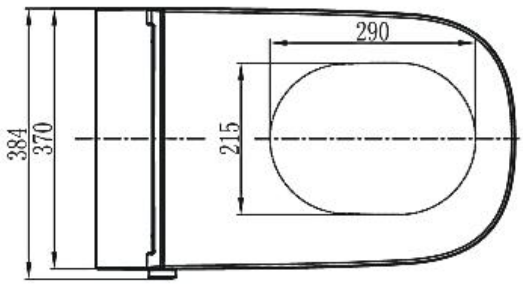

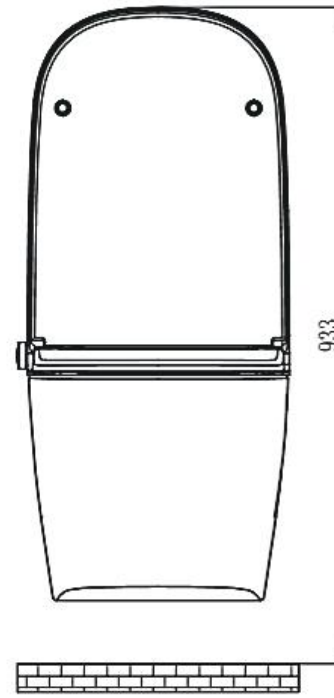

PARTS LIST

Toilet

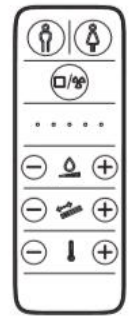

Remote
(Batteries Not Included)

Remote Control
Holder

Electrical Cable Coupler

G3/8" – ½"
Flexi Hose

Flow Limiter

Stop Valve

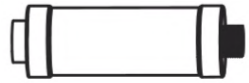

Filter x 2

Flush Pipe and Seal

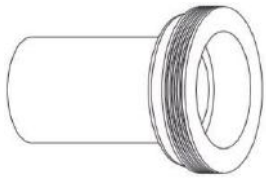

Waste Pipe and Seal

Wall Fixing Rods

Wall Fixing Nuts

Wall Fixing Washers

Side Fixing Bolt Sleeve

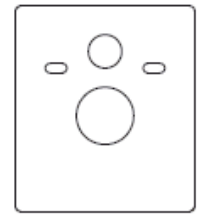

Wall Cushion

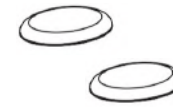

Decorative Screw Cover

TOOLS REQUIRED

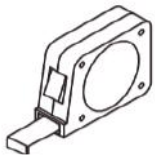
Tape Measure

Pencil

Phillips Screwdriver

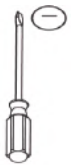
Flat Head Screwdriver

Knife

File

Adjustable Wrench

Wire Strippers

12mm Drill bit

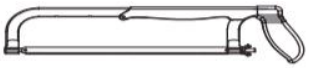
Hacksaw

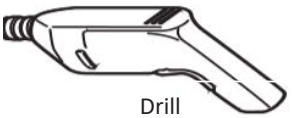
Drill

PRODUCT OVERVIEW

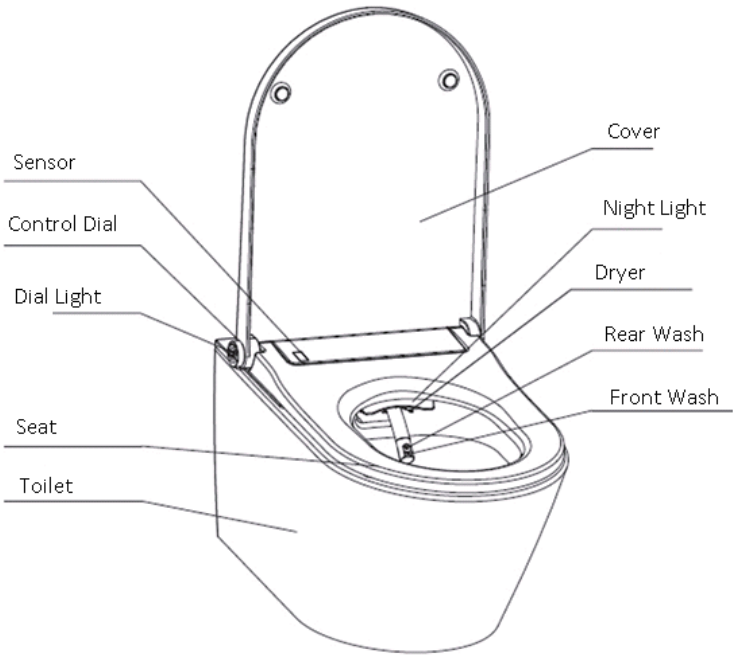

BEFORE INSTALLATION

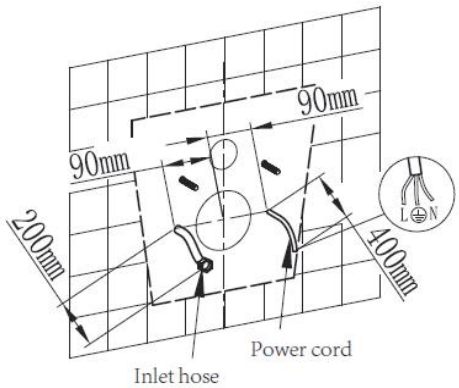

Recommended installation area.

IMPORTANT!

Before commencing installation, the water and electrical supplies should be turned OFF.

Please note with your floor mounted back to wall toilet, a Flush Pipe and Waste Pipe are supplied, these may not be required as it will be dependant on the cistern to which the toilet is being connected and the position of the soil stack.

Before attempting installation, ensure that you are in possession of all the required tools and fittings to ensure successful installation.

Prepare the wall with the wall frame fitted, tiled/finished with access holes prepared for the flush pipe and waste pipe.

Prepare the water supply pipe with a 1/2" female connector and electrical 3 core cable (which should be connected to a 13-amp fuse spur or isolation switch outside the bathroom) as per below, allowing for 200mm of water supply pipe and 400mm of electrical cable to extend beyond the surface against which the toilet will sit, to allow connection to the toilet unit.

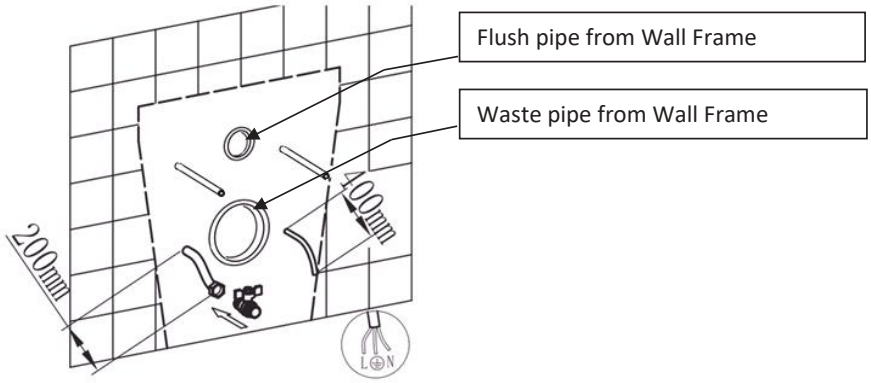

INSTALLATION INSTRUCTIONS

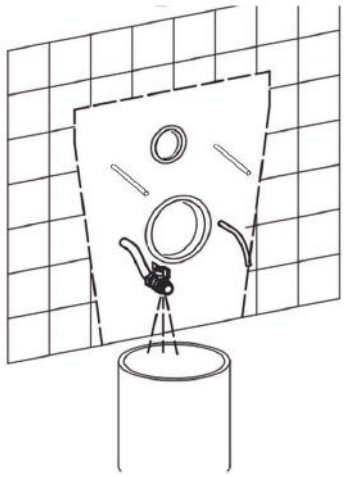

Connect the stop valve to the pipe end, ensuring to fit an adequate seal and tighten using a spanner.

Once connected and fully tightened, place a bucket under the stop valve, open the stop valve and flush the pipe for at least 10 seconds to remove any debris in the system.

Once flushed through, turn the stop valve to the closed position.

Connect the 1/2" female threaded end of the Filter to the Stop Valve, ensuring to fit the seal provided and tighten.

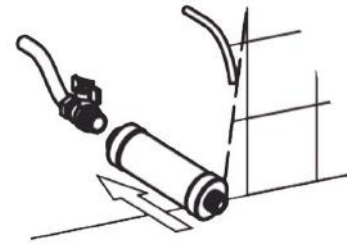

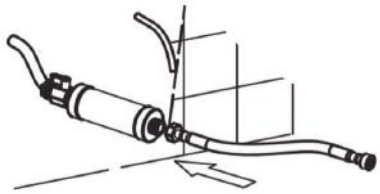

Connect the 3/8"" - 1/2" Flexi Pipe to the Filter, ensuring to fit the seal provided and tighten using a spanner, do not over tighten as this could crack the plastic body of the Filter.

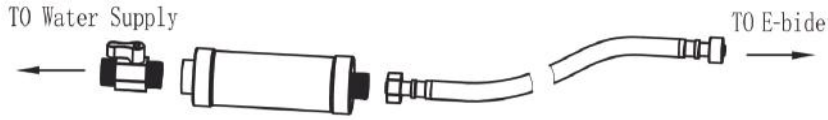

The required water supply pressure is 0.7-7.5 Bar as stated in the instruction manual. Check the water supply when connecting the filter.
To meet 0.7 bar water supply there should be 1.5L water (3 bottles water @ 500ml) within 60 seconds. Please note this is after the filter is installed. If this is not met, water flow must be increased.

Push the flush pipe and waste pipe supplied into the wall frame, ensuring these are level and aligned.
Using a ruler draw a line on the flush and waste pipe, where it meets the wall surface.

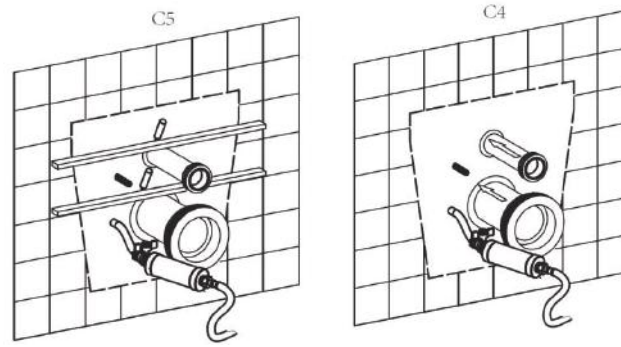

Remove the pipes from the wall and push them fully onto and into the back of the toilet pan, using a ruler mark a line level with the back of the pan.

Remove the flush pipe and measure and measure the distance between the two marks, this will be dimension L1.

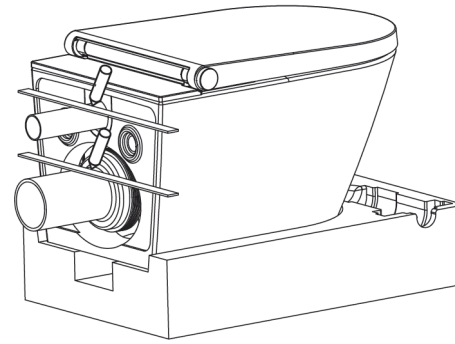

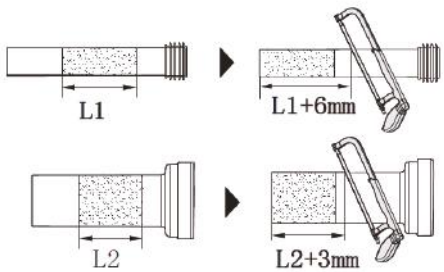

From the end of the flush pipe measure dimension L1 and then add 6mm, cut at this point, as shown below.

Carry out the same process for the waste pipe, but only add 3mm and cut at this point as shown below.

Once cut, using a file, smooth off the pies internally and create a chamfer on the external edge as shown below.

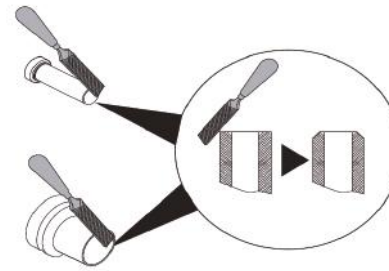

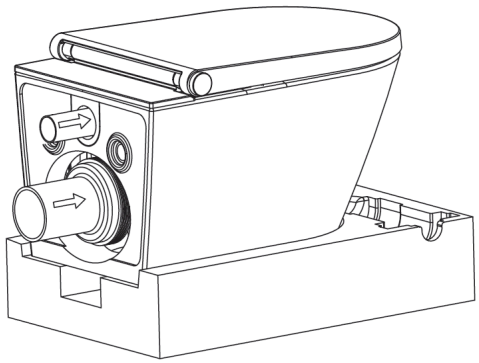

After cutting and filing, insert the pipes into the back of the toilet and ensure these are fully attached.

Remove the screws on the seat, using a cross head screwdriver, ensuring not to lose the screws once removed.

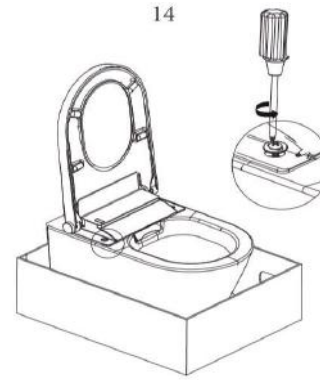

Two people may be required for the next part of the installation.

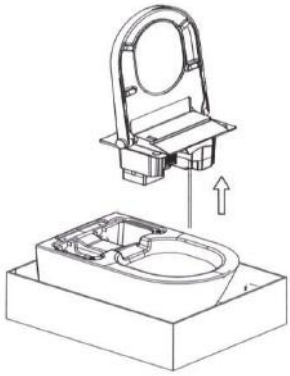

Pull the seat from the toilet pan (do not turn this upside down).

The threaded bolts should be attached to the frame and screwed inwards until 48mm of thread is left exposed, as shown below.

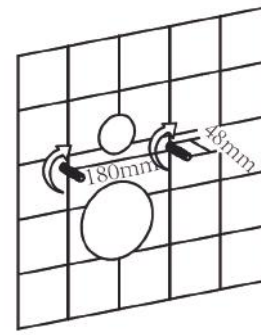

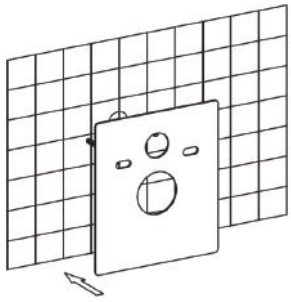

Place the toilet cushion against the wall over the threaded bolts and pipe holes

Push the toilet base into position against the wall, ensuring that the waste and flush pipes to the rear engage to create a full seal and the holes in the back of the pan sit over the threaded bolts on the frame.

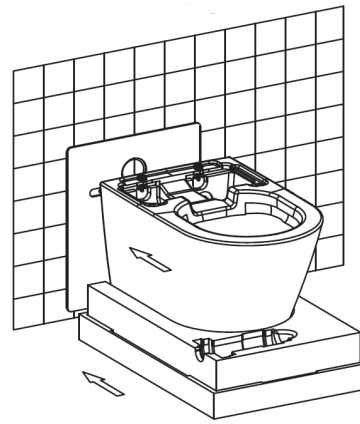

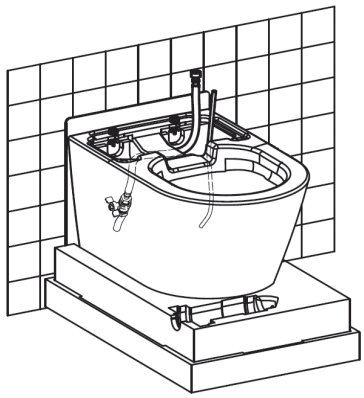

Pull through the flexi pipe and cable, to allow connection to be made with the seat unit.

Push the threaded bolt sleeves over the threaded bolts and into the hole in the pan to prevent the metal of the bolt damaged the ceramic, during use.

Place the washer onto the threaded bolt, then fit the nut and tighten until the pan is secure.

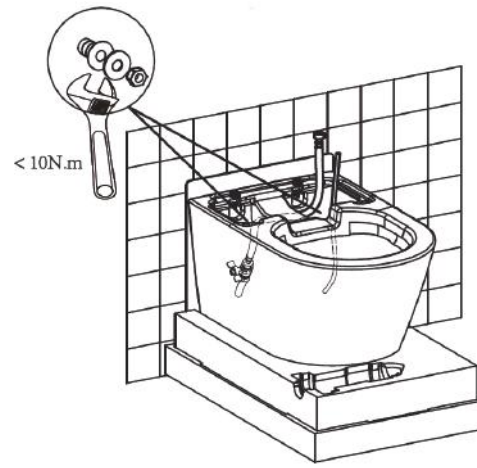

Slide out the support box from underneath the toilet pan, only when the pan is secured.

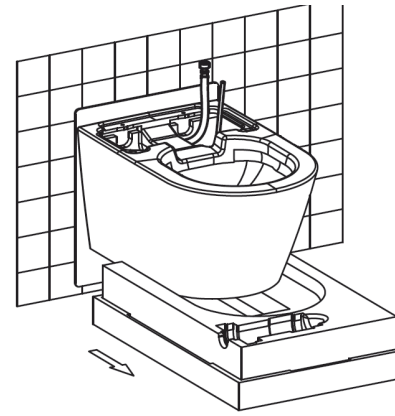

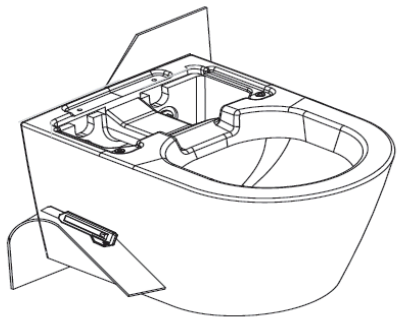

Trim the cushion which is exposed around the edge of the toilet pan, using a sharp knife.

Strip the end of the household cable to expose the wires for connection to the coupler.

When stripped, tidy the ends and connect to the coupler as shown, ensuring the screws are tightened and the wire ends are fully secured.

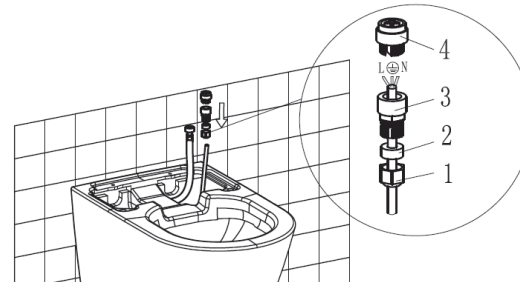

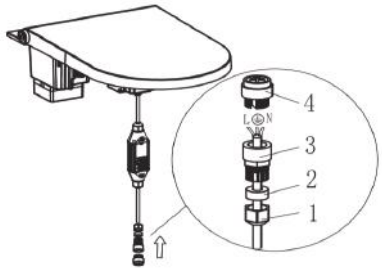

Carry out the same process for the cable attached to the toilet, then connect the coupler sections together.

Connect the end of the water supply flexi to the tank inlet on the underside of the toilet lid, this will require a firm push to connect the flexi to the inlet.

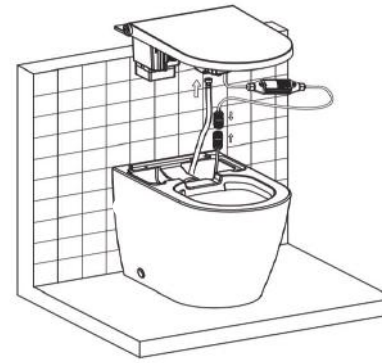

Once fully inserted and secure, tighten the nut.

Before replacing the seat, turn on the water supply, the stop valve and the electrical supply.

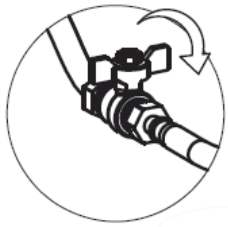

After turning on the water and electrical supplies you **MUST** carry out the RCD test, instructions for this are printed on the rear of the RCD, also carry out a leak check on all water connections.

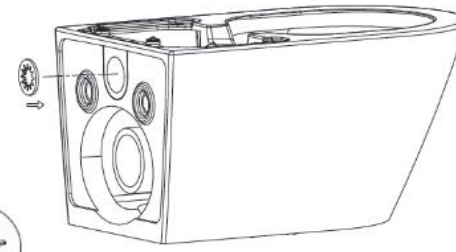

If the water volume within the flushing system is too great and water splashes over the rim, a flush rate limiter is necessary. If after installing the limiter, the bowl does not fully empty/clean, cut off one or more teeth of the limiter

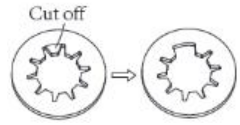

When checks are completed and no leaks are found and RCD test is passed, the lid assembly can be re-fitted to the pan, feed the flexi pipe and cables carefully under the pan, so as not to trap the pipe or cable or cause any kinks, which will reduce water flow.

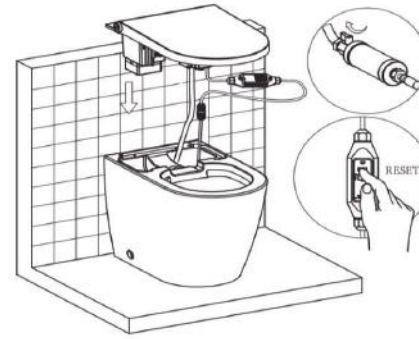

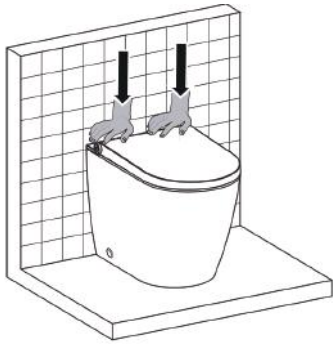

Locate the seat onto the pan and push down at the rear (not in the middle), as this could crack the seat.

When the seat is located, re-fit the seat screws and tighten until secure, then fit the cover caps.

INSTALLATION OF THE REMOTE HOLDER

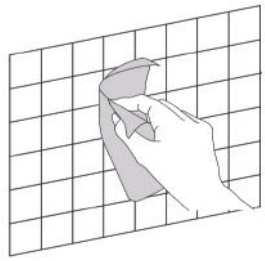

Clean the wall surface in the area in which the remote-control holder will be located

Dry fully before attempting the installation

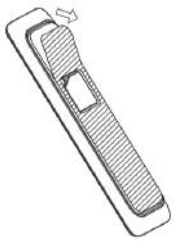

From the rear of the holder, peel off the adhesive strip cover.

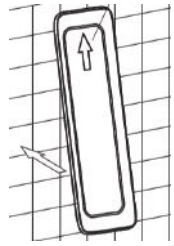

Place the holder with the adhesive side to the wall, ensuring this is level, press to the wall firmly and hold for a couple of seconds.

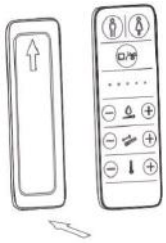

Once located and secure, place the remote control against the holder. The magnet within the holder will retain the remote in position.

REMOTE CONTROL

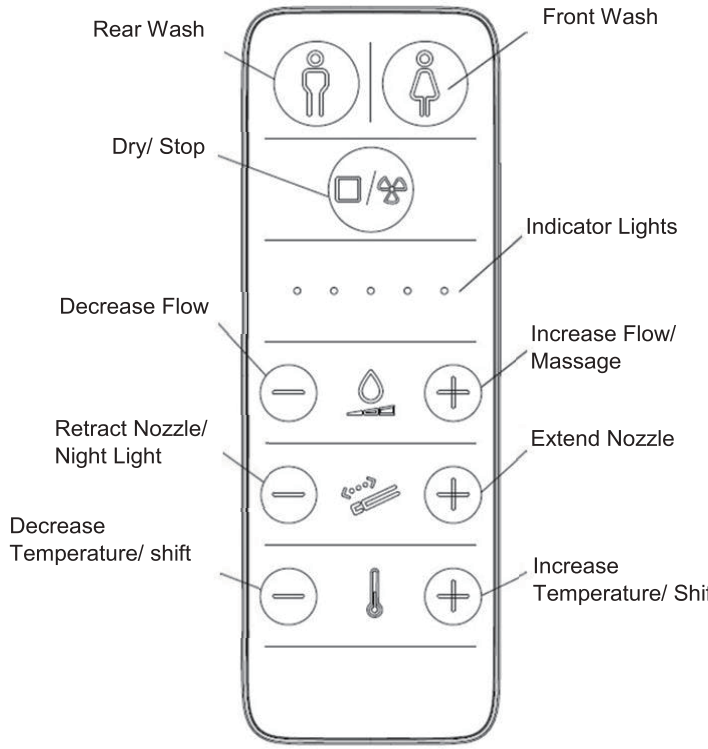

FITTING / REPLACING BATTERIES

- Different types of batteries or new and used batteries should not be mixed
- Batteries should be inserted using the correct polarity
- Exhausted batteries should be removed and disposed of safely
- If the appliance is not to be used for a long period, batteries should be removed

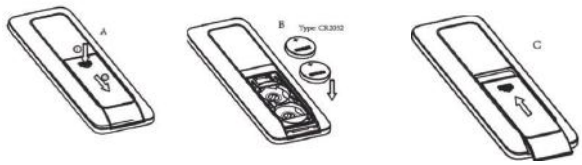

NOTE: Batteries are not included.
The remote requires
2 x 3v CR2032 batteries.

When the light flashes continuously, the batteries need to be replaced
On receipt of your remote, this should be synced to your toilet, if the remote does not work initially, check the batteries are installed and installed correctly and then try to sync the remote using the “Remote Sync” section
The same applies when batteries are changed.

OPERATION

REAR WASH/ FRONT WASH

While seated, press the rear wash or front wash button on the remote and the toilet will begin wash mode.

Alternatively, the dial on the side of the toilet can be turned clockwise to activate front wash or anticlockwise to activate rear wash.

The washing function will run for 3 minutes.

Once your product is installed and all water and electrical supplies are connected and operational, your toilet is ready for use.

NOTE: The toilet seat must have a water supply connected, the toilet cistern filling and the toilet flushing does not automatically confirm a water supply is connected to the seat.

NOTE: If the toilet is not used for 72 hours the next operation will be proceeded by a tank clean, please refer to “Tank Self Clean Section”

Operation

Lift up the toilet seat lid, locate yourself so that the sensor detects a user.

Press the wash button, when you do this the toilet will carry out an automatic nozzle self-clean which lasts for around 9 seconds.

The nozzle chamber flap will open, the nozzle will not immediately extend, but water will run from the chamber starting the cleaning process.

The nozzle will then extend and water will continue to run (not spray), after approx. 9 seconds the wash (for user) will commence and start the spray.

When you stop the wash, the toilet will self-clean for around 9 seconds.

When the wash mode is activated, after a 10 second delay the nozzle will move for 18 seconds before staying in the set position for the rest of the wash.

While in wash mode, you can adjust the following settings:

MASSAGE

Change between “OSCILLATING”, “PULSATING” AND “OSCILLATING AND PULSATING” functions.

To access massage mode, keep pressing the + or – temperature buttons. Then, press the + water flow button to change between the different massage functions.

The Indicator lights on the remote will show the massage mode selected.
1 Light – Oscillating Mode
2 Lights – Pulsating Mode
3 Lights – Oscillating and Pulsating Mode
Please Note: The massage mode can only be adjusted using the remote control.

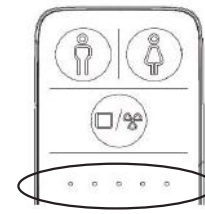

WATER FLOW

Change between LOW, MEDIUM or HIGH

To adjust the water flow, press the + or – water flow buttons on the remote. The indicator will show the rate that the water is flowing between LOW, MEDIUM and HIGH.

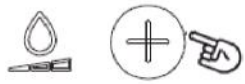

You can also adjust the water flow using the dial located on the side of the toilet. Turn the dial clockwise to increase the flow or anticlockwise to decrease.

WATER TEMPERATURE ADJUSTMENT

The water temperature can be adjusted.

Use the temperature adjustment buttons on the remote. Press the + or – to increase or decrease the temperature.

Press and hold the dial on the side of toilet. The Temperature can then be increased by turning clockwise or decreased by turning it anticlockwise. Move “Air Dry Mode and Indicator Light” to “Other functions” section, as these are not functions that you would change during the wash function.

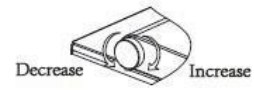

STOP

Stops all functions immediately no matter where they are in their cycle.

To stop any of the functions at any time, press the stop button on the remote control.

ADJUST NOZZLE

The nozzle position controls where the water is sprayed during washing mode.

Change the nozzle position by using the + and – nozzle buttons on the remote to retract or extend the nozzle.

Please Note: The nozzle position can only be adjusted using the remote control.

OTHER FEATURES

The intelligent toilet comes with other features that improve its ease of use. These can be adjusted when no other function is in operation.

AIR DRY MODE

When seated and in wash mode, press the Dry/Stop button on the remote or Stop on the side control of the seat, then press the Dry/Stop button again and air-dry mode will operate for 3 minutes.

While the air-dry mode is operating, you can change the following settings:

AIR TEMPERATURE ADJUSTMENT	
Adjust the temperature of the air flow by using the + and - adjust temperature buttons on the remote.	Turn the dial on the side of the seat clockwise to increase the air temperature or anticlockwise to reduce it.
STOP The stop button stops all functions no matter where they are in their cycle. The air dryer comes to a stop within five seconds.	
To stop any of the functions at any time, press the stop button.	

INDICATOR LIGHT
The indicator light on the control dial is on by default. To turn it off press and hold the “+” or “-“temperature button. Then press the “Rear Wash” button. The Indicator light will illuminate when the “Rear Wash” button is pressed again. 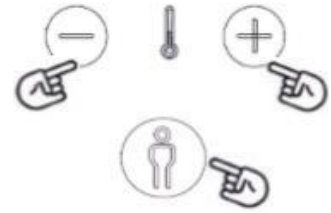
Note: If the dial light flashes slowly (once every 2-3 seconds) during normal use, this doesn't indicate a fault. Please open the cover, do not sit on the seat, pull the knob and rotate it in the clockwise direction. The ambient light will be turned off. It will be turned back on when rotating it in the clockwise direction again.

Or Open the cover and sit, without washing or drying, keep pressing the control dial for 6 seconds, the lamp will turn off, if pressed again for 6 seconds, the light will turn on.

NIGHT LIGHT

The night light defaults to always “ON”. Press and hold either the + or – temperature button on the remote at the same time as pressing the – nozzle button. Keep pressing the – nozzle button to change between OFF, ON and SMART modes. (Light will ONLY operate in SMART mode in dark conditions).

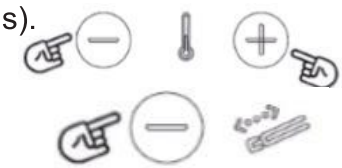

Alternatively, the night light can be adjusted by lifting the toilet lid and seat. Then turn the control dial on the side of the seat anti clockwise to change the mode.

AUDIO

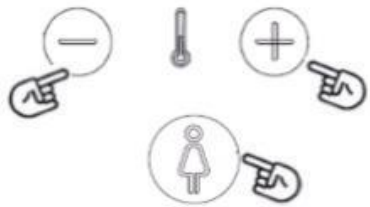

The toilet will bleep when settings are changed. To turn this alert off press and hold the “+” or “-“temperature button. Then release and press the Front Wash Button. The sound/beeps will turn off. Press the Front Wash button again and the sound will be activated.

Or Open the cover and seat, keep pressing the control dial then rotate, the sound will activate when turned clockwise and deactivate when turned anti-clockwise

STANDBY

Without sitting press and hold the control dial on the side of the seat for 6 seconds, the seat will go into “Standby Mode” Press and hold the button again for 6 seconds to restart the seat.

Remote Control Sync

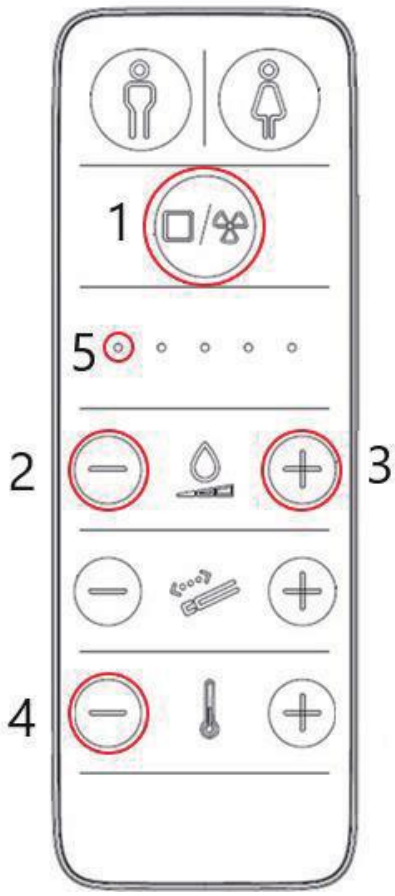

Step 1
Open the lid and the seat.
Turn off the night light using the side control (Refer to the "light Setting")

Step 2
Press and hold the STOP button (1) and "-" button (4) at the same time for a few seconds until the first light (5) flashes.

Step 3
Release the STOP button (1) but keep pressing "-"button (4).

Step 4
While still Pressing "-" button (4), press "-" button (2) then "+"button (3) then release the "-" button (4), the indicator lights will flash on and you will then know the ID code for the toilet by referring to the table below for future reference and the remote is then synced with the toilet.

A few second later, all lights will turn off and you can start to control the toilet.

For multi installations:
When you finish the above 4 steps, you can press "-" button (2) and "+"button (3) to change the ID code for the toilet.
There are 5 lights, but only the first 4 lights indicate for the ID code as below:

● Not Illuminated ○ Illuminated

LIGHT SHOWING	ID CODE NO
○●●●	0
●○●●	1
○○●●	2
●●○○	3
○●○●	4
●○○●	5
○○○●	6
●●●○	7
○●●○	8
●○●○	9

CLEANING AND MAINTENANCE

Daily	Remove water drops with a soft lint free cloth to avoid limescale build-up.
Weekly	Clean all surfaces and corners. Clean the spray nozzle is necessary (see Nozzle cleaning)
Monthly	Clean the ceramic with low acidic cleaning agents.
Every 6 months	Replace the filter if required. (see replacing the filter)

NOTE: Do not use strong abrasive cleaning agents or materials, as this can damage the product and will invalidate your guarantee.

TANK SELF-CLEAN

If the product is not used for more than 72 hours, the next time it is used, and the wash function is activated, the unit will carry out a self-clean for approximately 3 minutes. All functions will be de-activated during this time.

The nozzle will not extend but water will run out form inside the chamber into the toilet until the clean is completes

CLEANING THE NOZZLE

It is recommended that regular cleaning of the nozzle takes place to prevent blockages.

To manually clean the nozzle, follow the below:

Open the seat cover and seat, then rotate the control dial clockwise. The nozzle will extend, rub clean with a brush to clean the nozzle holes and then wipe clean.

The nozzle will return after a 5-minute period or you can press the Stop button.

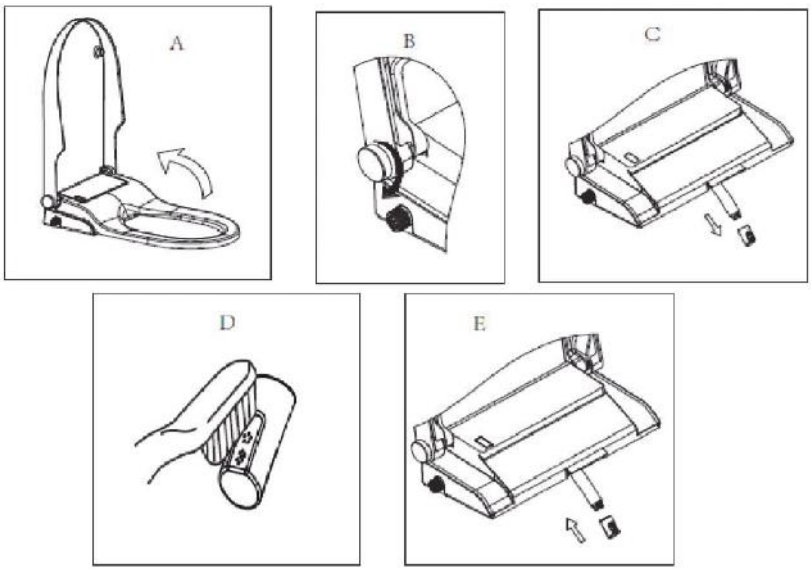

REPLACING THE FILTER

The filter supplied has a life of 6 months and should be replaced to prevent reduced flow. This can be affected by the water type i.e. Hard Water areas.

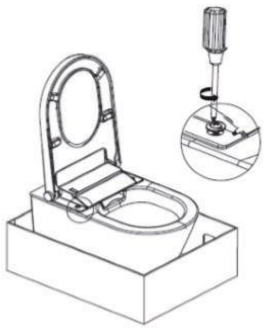

To replace the filter, you will need to turn off the power supply and the water supply and the seat will need to be removed.

Once the power has been cut to the unit, unscrew the seat from the toilet, do not turn the seat upside down. Once removed, access the filter and the stop valve.

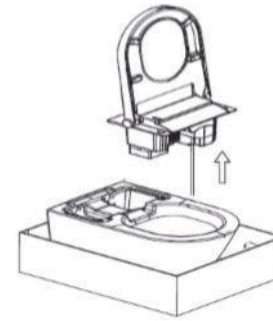

Turn the stop valve to the closed position.

Disconnect the filter and replace with the new part, ensuring to re-fit the seals.

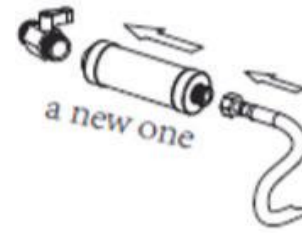

Feed the pipes back into the toilet base, turn the power back on and re-set the RCD Re-open the stop valve. Re-fit the seat and secure into position.

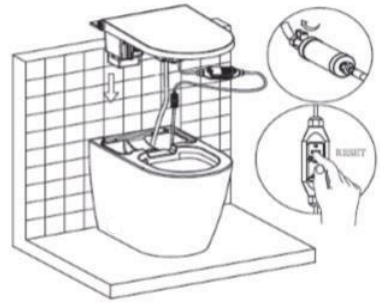

DRAINING THE WATER TANK

The water and power must be cut to the unit before work is started Do not invert the seat.

Ensure a water holding container is in place prior to draining

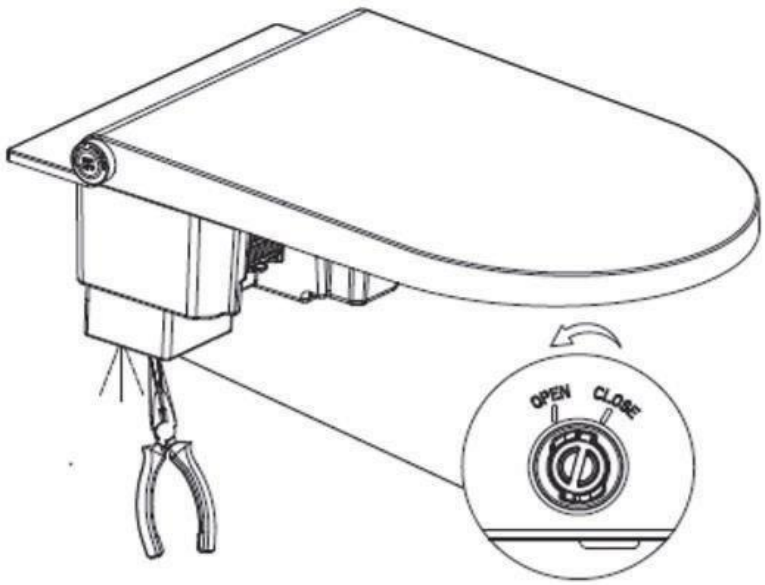

Using pliers hold the plug on the tank turn the plug to OPEN and pull out Water will start to drain.

After draining is completed, insert the plug and turn to CLOSE.

TROUBLESHOOTING

Problem	Potential cause	Suggested action
The washing function not operating	The power supply may not be connected	Ensure the power switch is in the on position and the RCD has been reset.
	The water supply may be disconnected	Ensure the inlet water valve is in the open position, and ensure there is adequate water flow to the unit.
	The filter may be blocked	Please replace a new filter. It has a service life of approx. 6 months.
	Seat detector not activated	Ensure the seat is occupied to activate the function.
	Toilet lid is closed	Lift the toilet seat.
	Function not used for more than 72 hours	The self-cleaning function will activate, which takes around 3 minutes. During self-cleaning all the buttons are deactivated until the function has completed.
	Seat assembly is not connected to water supply	Check the seat assembly has a connected and flowing water supply, as the cistern filling does not confirm water to the seat.
Seat not working and double beeping when lid up, seat down and sensor covered	Hall sensor or infrared sensor failure	Replace seat assembly
Washing function suddenly stops and nozzle retracts.	The washing cycle is 3mins. The nozzle will stop spraying after 3mins, and then retract.	This is normal and please press the "wash" button to start another wash cycle.
	Water supply interrupted	Please check if there is a water outage
	The seat detector has sensed the user left the seat	Please adjust sitting position
	The toilet lid is not fully open	Ensure the lid remains upright during the function.
Low water flow rate	The water flow rate may be set at low grades	Please increase the flow rate as per "adjusting water flow rate" of operating instructions
	The water supply pressure may be too low	Please check and ensure the water supply pressure is 0.07Mpa
	The filter may be blocked	Replace the filter. It has a service life of approx. half a year
	The nozzle may be blocked	Please replace the nozzle
Low water temperature	The water temperature may be set at low grades	Please set the water temperature at high grade as per "adjusting temperature “of the operating instructions
	The temperature of water supply is too low	Please set the water temperature at high grade as per "adjusting temperature “of operating instructions, or decrease the flow rate as per "adjusting water flow rate".
The nozzle comes out slowly	Upon starting the washing function, the nozzle will be in self-cleaning mode before coming out.	This is normal
The water flows out but the nozzle does not come out	The toilet is not used for more than 72 hours	This is normal. If not used for more than 72 hours, when the unit starts it will begin the self-cleaning for about 3 minutes
The dryer cannot work	The power supply may not be opened	Please turn on the power
	Not correctly seated	Please sit on the seat and adjust sitting position
	The cover is closed	Please open the cover and sit on the seat
Low air temperature	The air temperature may be set at low grades	Please set the air temperature at high grade as per "adjusting temperature “of operating instructions
	The air heater is not working normally	Please contact local distributor
Night light is always off	To much light in the surrounding environment.	When the night light is set at smart mode, the night light will not work when in the bright environment.
	The night light function may be closed.	Please open the night light function and adjust the night light mode as per "Light Setting".
Night light is always on.	1. Environment is dark.	When the night light is set to smart mode, the night light will be always on when in a dark environment

	2. Something may be covering the control dial.	Remove the obstructions around the control dial
	3. The night light may be set to ‘Always On’ mode	Please adjust the night light mode as per "Light Setting" of operating instructions
The nozzle goes back automatically when manual cleaning	1. The nozzle goes back after washing 5 minutes	This is normal
	2. Press the "stop" button	Manual cleaning will be stopped if you press the control dial or press the "stop" button on the remote control.
	3. The seat detector senses that the seat is closing	Please do not put down seat during manual cleaning
The remote control is not functioning	1. There are no batteries in the remote control	Please install the correct batteries in the remote control
	2. Maybe the battery power is too low	When batteries are low, LED will flash. Change the batteries
	3. Maybe the code of the bidet and remote control is not the same	Please set the code of the remote control to the correct one. See "Remote Control Synch"
There are BEEP sounds when the bidet is operating	There is a short BEEP when you are sitting down, and a long BEEP when you leave. Also, there is a short BEEP when the bidet has received commands.	This is normal. You can turn off the sound. See "Sound Setting"
The bidet does not function normally	Abnormal operation	Please shut off the power and turn on after one minute. If the bidet still cannot work, please contact local distributor
The light around the control dial flashes twice with constant BEEP	The water supply temperature may be too high	Please shut off the power and water supply, stop using the product, and then contact local distributor
The light around the dial keeps flashing (once every second or less).	There may be something wrong with the product	Please shut off the power and water supply, stop using the product, and then contact local distributor.

If you should encounter an issue with operation/function of your product please contact BID Customer Service.
To assist in the resolution, we will require your Serial number, a video of the issue, including operation of the remote or dial, position of the seat, video of the side control and sound to indicate any beeps which occur, this will give a full picture of the operation to help determine the best resolution or guidance.

SUPPORT

Recycling facilities are now available for all customers at which you can deposit your old electrical products. Customers will be able to take any old electrical equipment to participating sites run by their local councils. Please remember that this equipment will be further handled during the recycling process, so please be considerate when depositing your equipment. Please contact the local council for details of your local household waste recycling centers.

At the time of printing the product contains no substances listed within Annex XIV of the Reach Regulations (EC) 1907/2006. In accordance with Article 59 of the same regulation the following substances are contained within the product at permitted levels: Lead & Cadmium.
As a responsible manufacturer the regulations are monitored to ensure continued compliance. Further information can be provided upon request.

For more information

- **visit betterbathrooms.com**
- **email customerservices@buyitdirect.co.uk**
- **call 0330 390 3062**
- **Write to Trident Business Park, Leeds Road, HD2 1UA**

better bathrooms

Part of the BuyItDirect Group

TECHNICAL SPECIFICATIONS

MODEL		BeBa_24911/Beba_26880
Wash	Rear Wash	●
	Front Wash	●
	Oscillating Spray	●
	Pulsating Spray	●
	Oscillating and Pulsating Spray	●
	Adjustable Water Temperature	5 Steps (Default 3rd)
	Adjustable Flow Rate	5 Steps (Default 3rd)
	Adjustable Spray Position	5 Steps (Default 3rd)
Warm Air	Air Drying	●
	Adjustable Dryer Temperature	5 Steps (Default 3rd)
Hygiene	Nozzle Self Cleaning	●
	Nozzle Manually Cleaning	●
Night Light		●
Breathing Lamp		●
Soft Closing Seat and Cover		●
Body Control dial		●
Remote Control		●
Rimless Toilet		●
Installation of the toilet		Wall Mounted
Water Supply Connector		G 3/8” ½”
Rated Voltage		AC220–240V, 50/60HZ
Power		950W
Length of Power Cord		1.8m
Water Supply Pressure		0.07~0.75MPa (0.7~7.5Bar)
Water Supply Temperature		4~35ºC
Ambient Temperature		4~40ºC
Protection Degree		IPX4
wash Device	Flow Rate	350~650mL/min
	Water Temperature	31~39ºC
	Wash Cycle Time	3 Minutes
	Heating Mode	Tank
	Maximum Heater Power	1200W
	Safety Device	Thermal Cutoff/ Fuses\Liquid Level Switch\Thermostat
	Backflow Prevention	Air Gap
Dry Device	Maximum Speed Of Air	5m/S
	Maximum Dryer Power	280W
	Dry Cycle Time	3 Minutes
	Warm Air Temperature	35~50ºC
	Safety Device	Thermal Cutoff/ fuse›\Thermostat
Remote Control	Frequency Range	2460MHz
	Maximum RF Output Power	–10dBm
	Type of batteries	3V CR2032
	Number of batteries	Two pieces
Net Weight		32 Kg
Dimensions		593 x 370 x 380mm

EU DECLARATION OF CONFORMITY

Company Name:	Buy It Direct	
Postal Address:	Trident Business Park Leeds Road	The Black Church St Mary's Place
Postcode	HD2 1UA	Dublin 7
Telephone Number	0871 620 1057	01 255 2070
E-mail Address	Compliance@BuyitDirect.co.uk	

This declaration of conformity is issued under our sole responsibility and belongs to the following product:

Type of product:	Wall Mounted Intelligent toilet
Model Number:	BeBa_24911 / BeBa_26880
Brand:	Better Bathrooms
Object of Declaration	BeBa_24911 and BeBa_26880 Wall Mounted Intelligent Toilets

The object of the declaration described above is in conformity with the relevant Union harmonisation legislation:

Low Voltage Directive 2014/35/EU
EMC Directive 2014/30/EU
RoHS Directive 2011/65/EU
Radio Equipment Directive 2014/53/EU

Relevant harmonised standards used or other technical specifications in relation to which conformity is declared:

SAFETY	EN 60335-1:2012 +A13:2017 EN 60335-2-84:2003 + A1:2008	EN 62233:2008
EMC	EN 61000-3-2:2014 EN 61000-3-3:2013	EN 55014-1:2017 EN 55014-2:2015
RED	EN 301489 -1 V2.1.1:2017 EN 301489 -3 V2.1.1:2017	EN 300440 V2.1.1:2017
RoHS	EU 2015/863	

Authorised Signature

Richard Leach
Compliance and Quality Manager

24th August 2023

UK DECLARATION OF CONFORMITY

Company Name:	Buy It Direct
Postal Address:	Trident Business Park Leeds Road
Postcode	HD2 1UA
Telephone Number	0871 620 1057
E-mail Address	Compliance@BuyitDirect.co.uk

This declaration of conformity is issued under our sole responsibility and belongs to the following product:

Type of product:	Wall Mounted Intelligent toilet
Model Number:	BeBa_24911 / BeBa_26880
Brand:	Better Bathrooms
Object of Declaration	BeBa_24911 and BeBa_26880 Wall Mounted Intelligent Toilets

The object of the declaration described above is in conformity with the relevant UK Statutory Instruments and Regulations:

Electrical Equipment (Safety) Regulations 2016
Electromagnetic Compatibility Regulations 2016
The Restriction of the Use of Certain Hazardous Substances in Electrical and Electronic Equipment Regulations 2012
The Radio Equipment Regulations 2017

Relevant designated standards used or other technical specifications in relation to which conformity is declared:

SAFETY	EN 60335-1:2012 +A13:2017 EN 60335-2-84:2003 + A1:2008	EN 62233:2008
EMC	EN 61000-3-2:2014 EN 61000-3-3:2013	EN 55014-1:2017 EN 55014-2:2015
RED	EN 301489 -1 V2.1.1:2017 EN 301489 -3 V2.1.1:2017	EN 300440 V2.1.1:2017
RoHS	EU 2015/863	

Authorised Signature

Richard Leach
Compliance and Quality Manager

24th August 2023

DECLARATION OF PERFORMANCE

DOP BB-34-24911/26880

UKCA

Company Name:	Buy It Direct
Postal Address:	Trident Business Park, Leeds Road,
Postcode	HD2 1UA

CE

Company Name:	Buy It Direct
Postal Address:	The Black Church, St Mary's Place,
Postcode	Dublin 7

E-mail Address Compliance@BuyItDirect.co.uk

This declaration of performance is issued under our sole responsibility and belongs to the following product:

Type of product:	Wall Mounted Intelligent toilet
Model Number:	BeBa_24911/ BeBa_26880
Brand:	Better Bathrooms
Object of Declaration	BeBa_24911 and BeBa_26880 Wall Mounted Intelligent Toilet

We hereby declare that the products named above have been designed, are produced and have been tested to comply with:

Union Harmonisation Legislation and relevant harmonised standards Regulation (EU) No, 305/2011

Designated standards and relevant UK Statutory Instruments and Regulation Construction Products (Amendment etc.) (EU Exit) Regulations 2020 – SI 2020/1359
BS EN997:2012+A1:2015

Personal Hygiene
AVCP System 4

Essential Characteristics

CL 1 -6A – Class 1 product/ Flushing cistern	PASS
WL – Water Tightness / Leak Tightness	PASS
BP – Back Flow Prevention	PASS
CA - Cleanability	PASS
LR – Load Resistance	PASS
DA – Durability	PASS

Authorised Signature

Craig Watson
Technical Manager
9/9/22

BATTERY WARNING

KEEP OUT OF REACH OF CHILDREN

Swallowing can lead to chemical burns, perforation of soft tissue, and death. Severe burns can occur within 2 hours of ingestion. Seek medical attention immediately.

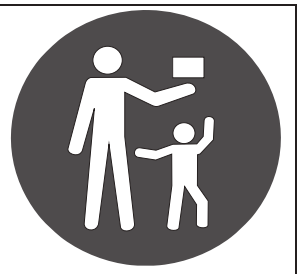

- If the battery compartment (if applicable) does not close securely, stop using the product and keep it away from children.
- If you think batteries might have been swallowed, or placed inside any part of the body, seek immediate medical attention

THERE MAY BE NO OBVIOUS SYMPTOMS OF BATTERY INGESTION

Unfortunately, it is not obvious when a button or coin battery is stuck in a child's oesophagus (food pipe). There are no specific symptoms associated with this. The child might:

- cough, gag or drool a lot;
- appear to have a stomach upset or a virus;
- be sick;
- point to their throat or stomach;
- have a pain in their abdomen, chest or throat;
- be tired or lethargic;
- be quieter or more clingy than usual or otherwise "not themselves";
- lose their appetite or have a reduced appetite; and
- not want to eat solid food / be unable to eat solid food.

These sorts of symptoms vary or fluctuate, with the pain increasing and then subsiding.

A specific symptom to button and coin battery ingestion is vomiting fresh (bright red) blood. If the child does this seek immediate medical help.

The lack of clear symptoms is why it is important to be vigilant with "flat" or spare button or coin batteries in the home and the products that contain them.